TI-RSLK MAX Chassis Board v1.0

Pinout and peripherals

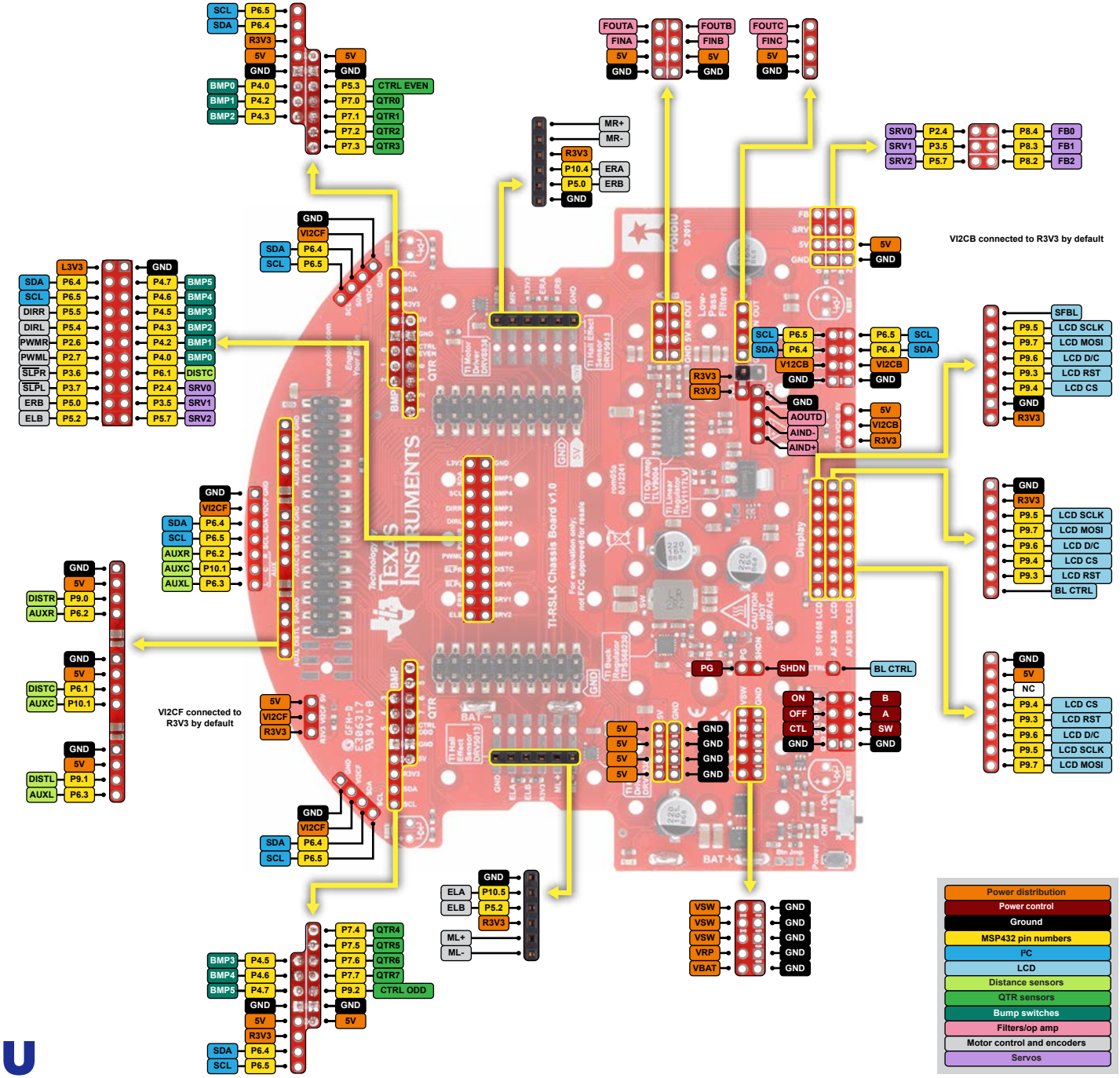

Pololu