Zumo 2040 Main Board

Pinout and peripherals

Top expansion

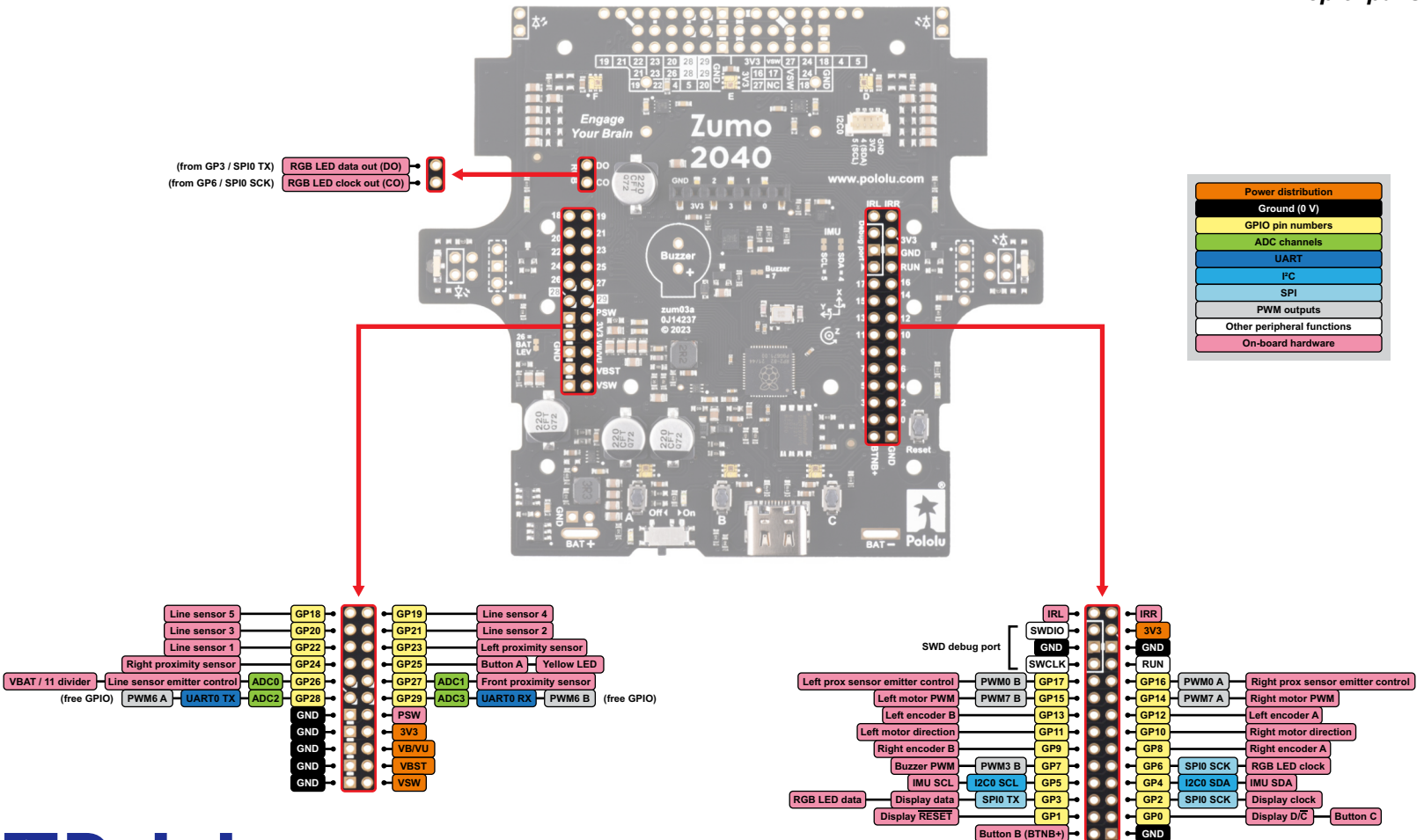

Zumo 2040 Main Board

Pinout and peripherals
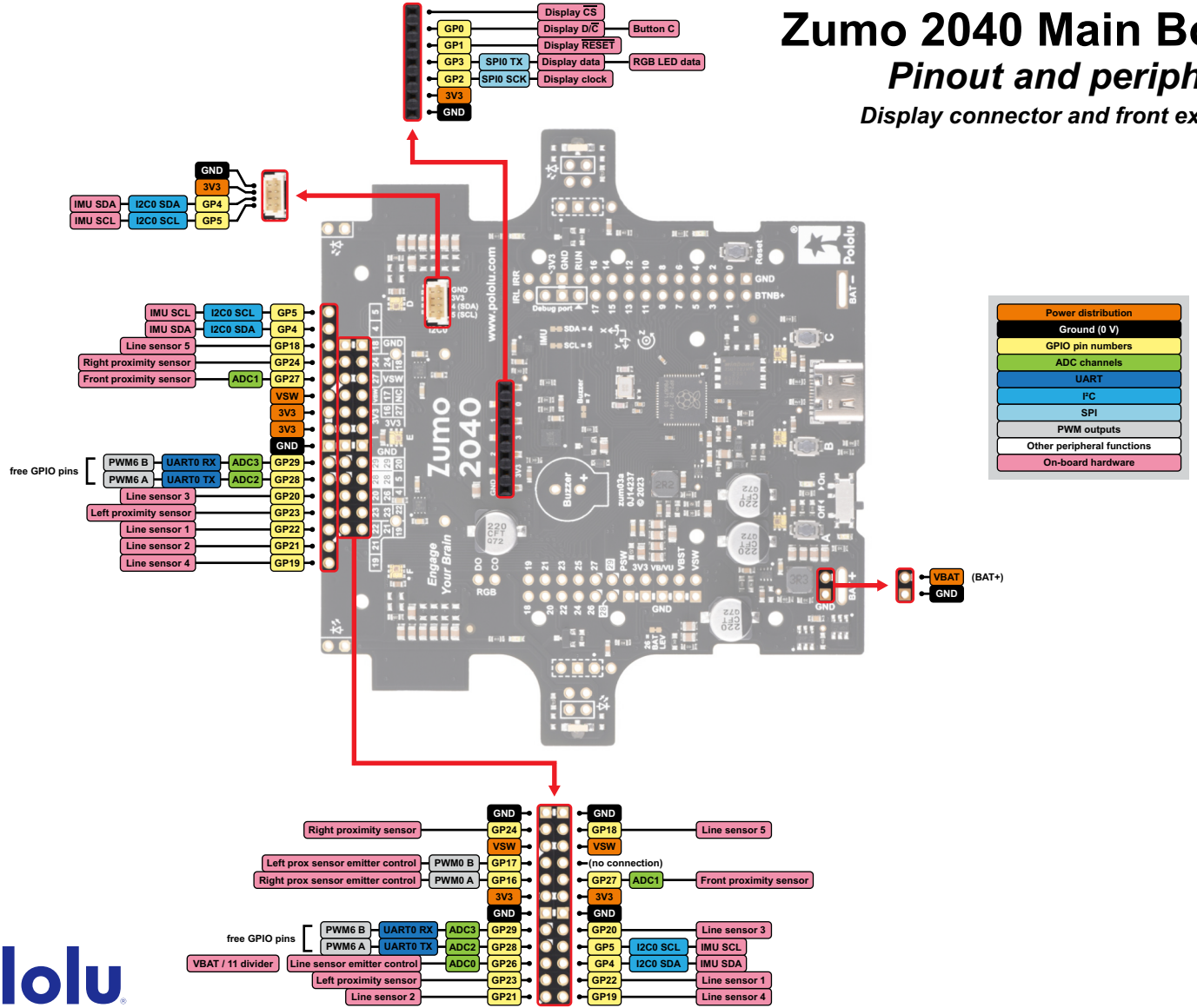
Display connector and front expansion